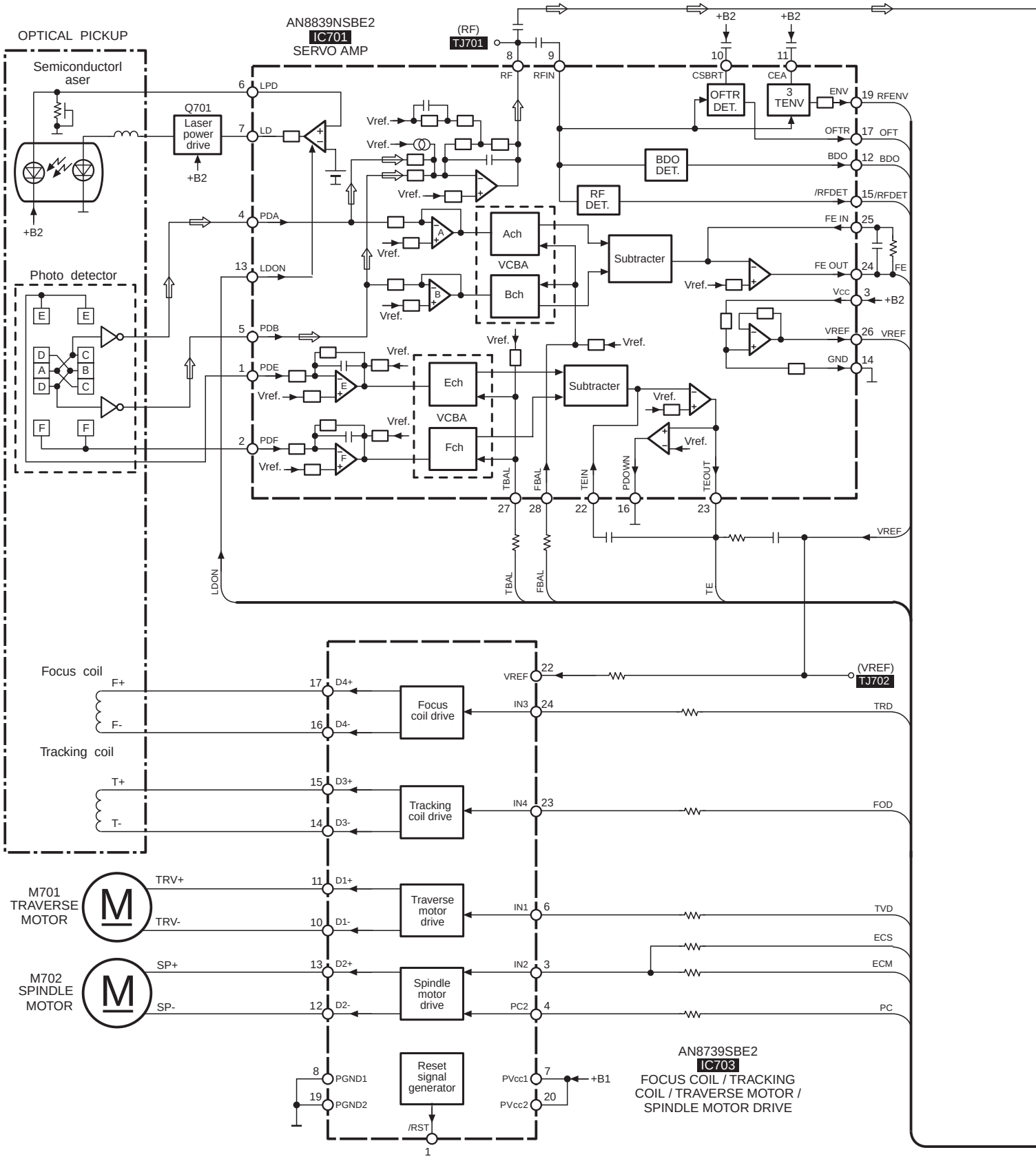
OPTICAL PICKUP
Semiconductorl aser
Q701
Laser power drive
+B2
Photo detector
AN8839NSBE2
IC701
SERVO AMP
(RF)
TJ701
LPD
LD
PDA
LDON
PDB
PDE
PDF
RF
RFIN
CSBRT
CEA
OFTR DET.
3 TENV
ENV
RFENV
OFTR
OFT
BDO DET.
BDO
RF DET.
/RFDET
FE IN
FE OUT
FE
Vcc
VREF
GND
Ach
Bch
VCBA
Ech
Fch
Subtracter
Vref.
TBAL
FBAL
TEIN
PDOWN
TEOUT
TE
(VREF)
TJ702
Focus coil
F+
F-
Tracking coil
T+
T-
Focus coil drive
Tracking coil drive
TRD
FOD
M701 TRAVERSE MOTOR
TRV+
TRV-
Traverse motor drive
TVD
M702 SPINDLE MOTOR
SP+
SP-
Spindle motor drive
ECS
ECM
PC
Reset signal generator
PGND1
PGND2
/RST
PVcc1
PVcc2
+B1
AN8739SBE2
IC703
FOCUS COIL / TRACKING COIL / TRAVERSE MOTOR / SPINDLE MOTOR DRIVE

MN662790RSA1

IC702

SERVO PROCESSOR / DIGITAL SIGNAL PROCESSOR
DIGITAL FILTER / D/A CONVERTER

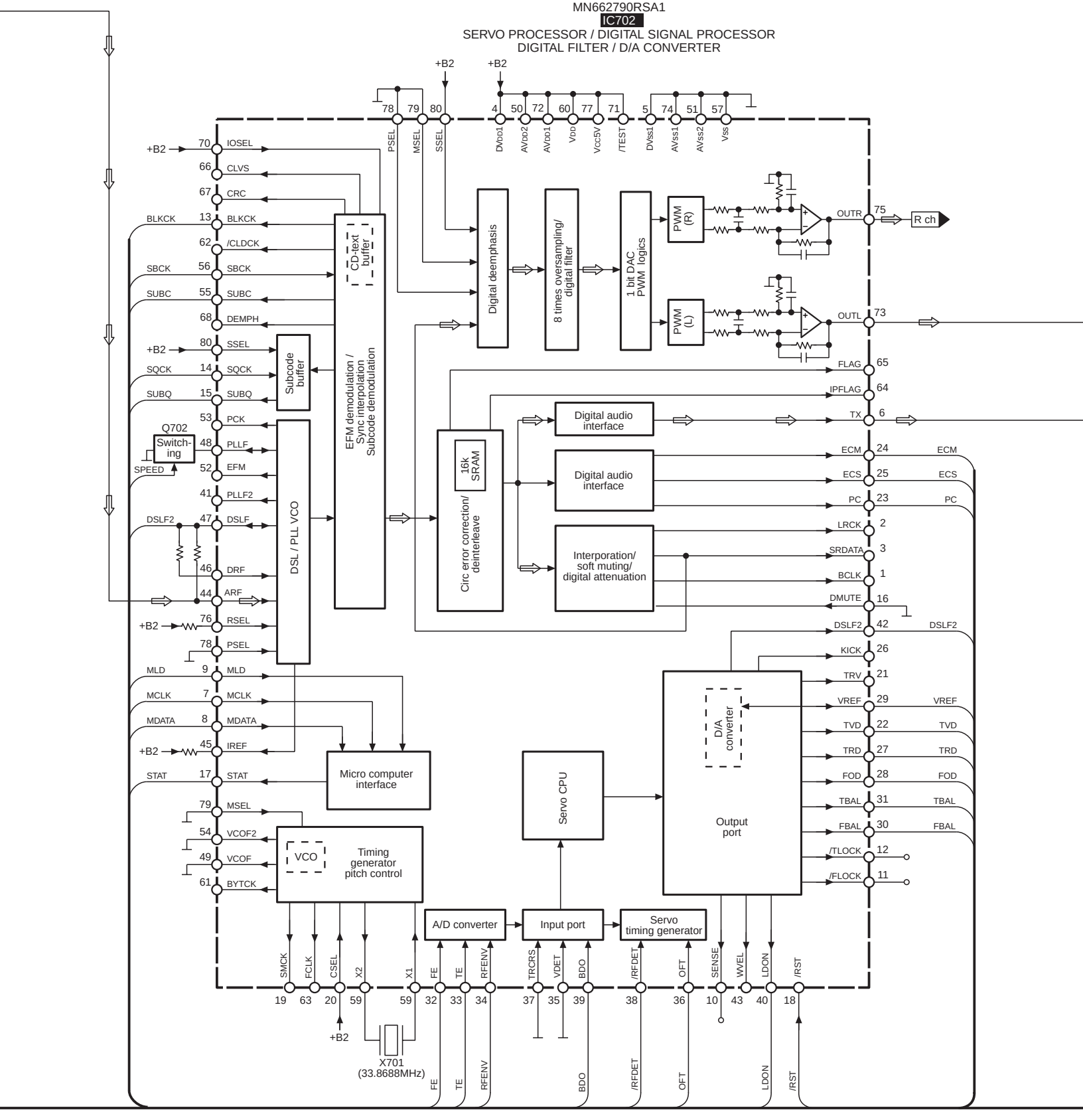

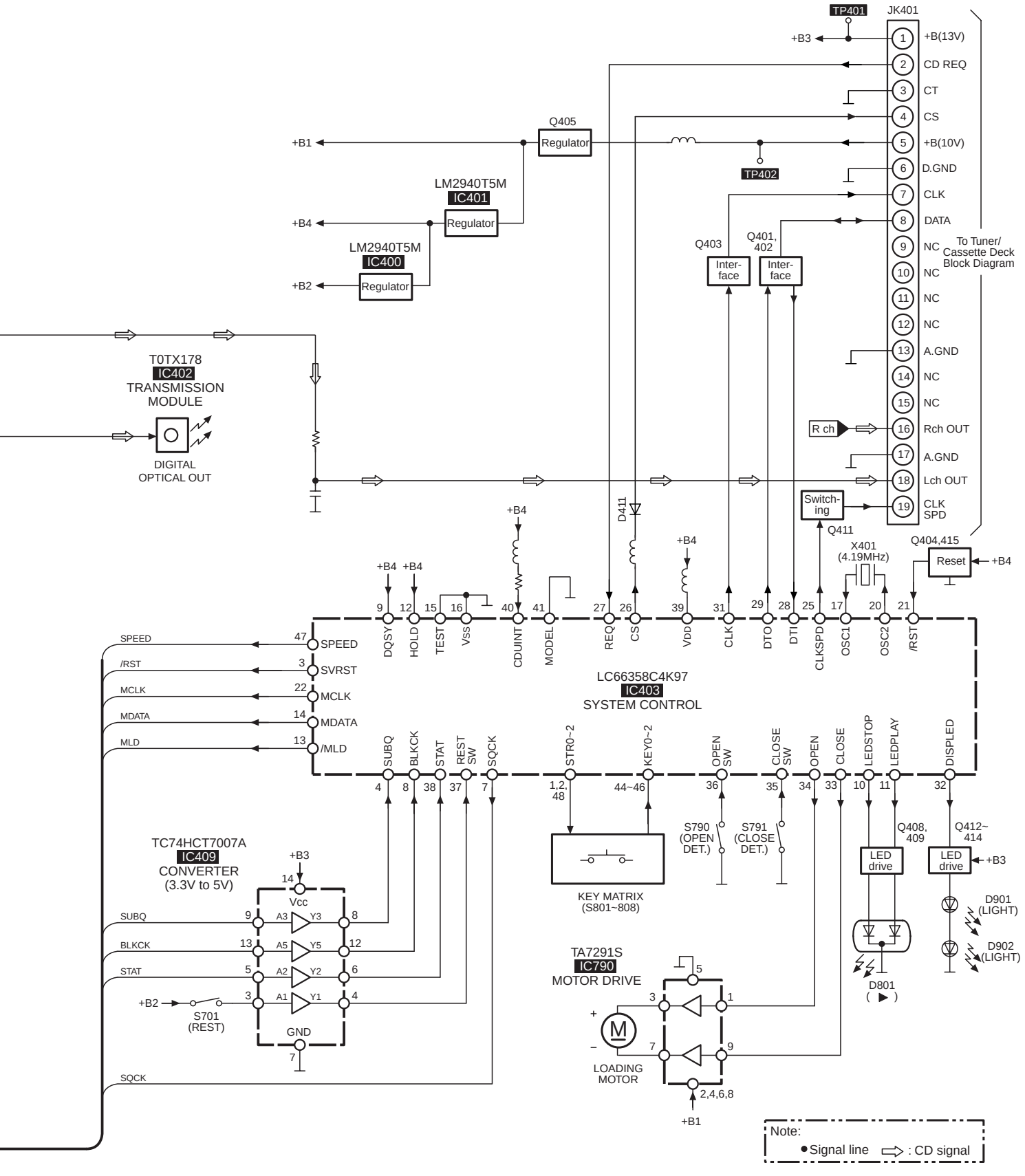
TP401
JK401
+B3
1 +B(13V)
2 CD REQ
3 CT
4 CS
5 +B(10V)
6 D.GND
7 CLK
8 DATA
9 NC
10 NC
11 NC
12 NC
13 A.GND
14 NC
15 NC
16 Rch OUT
17 A.GND
18 Lch OUT
19 CLK SPD
To Tuner/ Cassette Deck Block Diagram
Q405
Regulator
+B1
TP402
LM2940T5M
IC401
Regulator
+B4
LM2940T5M
IC400
Regulator
+B2
Q403
Inter-face
Q401, 402
Inter-face
R ch
T0TX178
IC402
TRANSMISSION MODULE
DIGITAL OPTICAL OUT
D411
+B4
Switch-ing
Q411
X401 (4.19MHz)
Q404,415
Reset
+B4
+B4 +B4
9 DQSY
12 HOLD
15 TEST
16 VSS
40 CDUINT
41 MODEL
27 REQ
26 CS
39 VDD
31 CLK
29 DTO
28 DTI
25 CLKSPD
17 OSC1
20 OSC2
21 /RST
SPEED
/RST
MCLK
MDATA
MLD
47 SPEED
3 SVRST
22 MCLK
14 MDATA
13 /MLD
LC66358C4K97
IC403
SYSTEM CONTROL
SUBQ
BLKCK
STAT
REST SW
SQCK
STR0~2
KEY0~2
OPEN SW
CLOSE SW
OPEN
CLOSE
LEDSTOP
LEDPLAY
DISPLED
4
8
38
37
7
1,2, 48
44~46
36
35
34
33
10
11
32
S790 (OPEN DET.)
S791 (CLOSE DET.)
Q408, 409
Q412~ 414
LED drive
LED drive
+B3
KEY MATRIX (S801~808)
D901 (LIGHT)
D902 (LIGHT)
D801
TC74HCT7007A
IC409
CONVERTER (3.3V to 5V)
+B3
14 Vcc
SUBQ
BLKCK
STAT
9 A3 Y3 8
13 A5 Y5 12
5 A2 Y2 6
3 A1 Y1 4
+B2
S701 (REST)
GND
7
SQCK
TA7291S
IC790
MOTOR DRIVE
5
3 1
7 9
2,4,6,8
+B1
LOADING MOTOR
Note:
Signal line
: CD signal